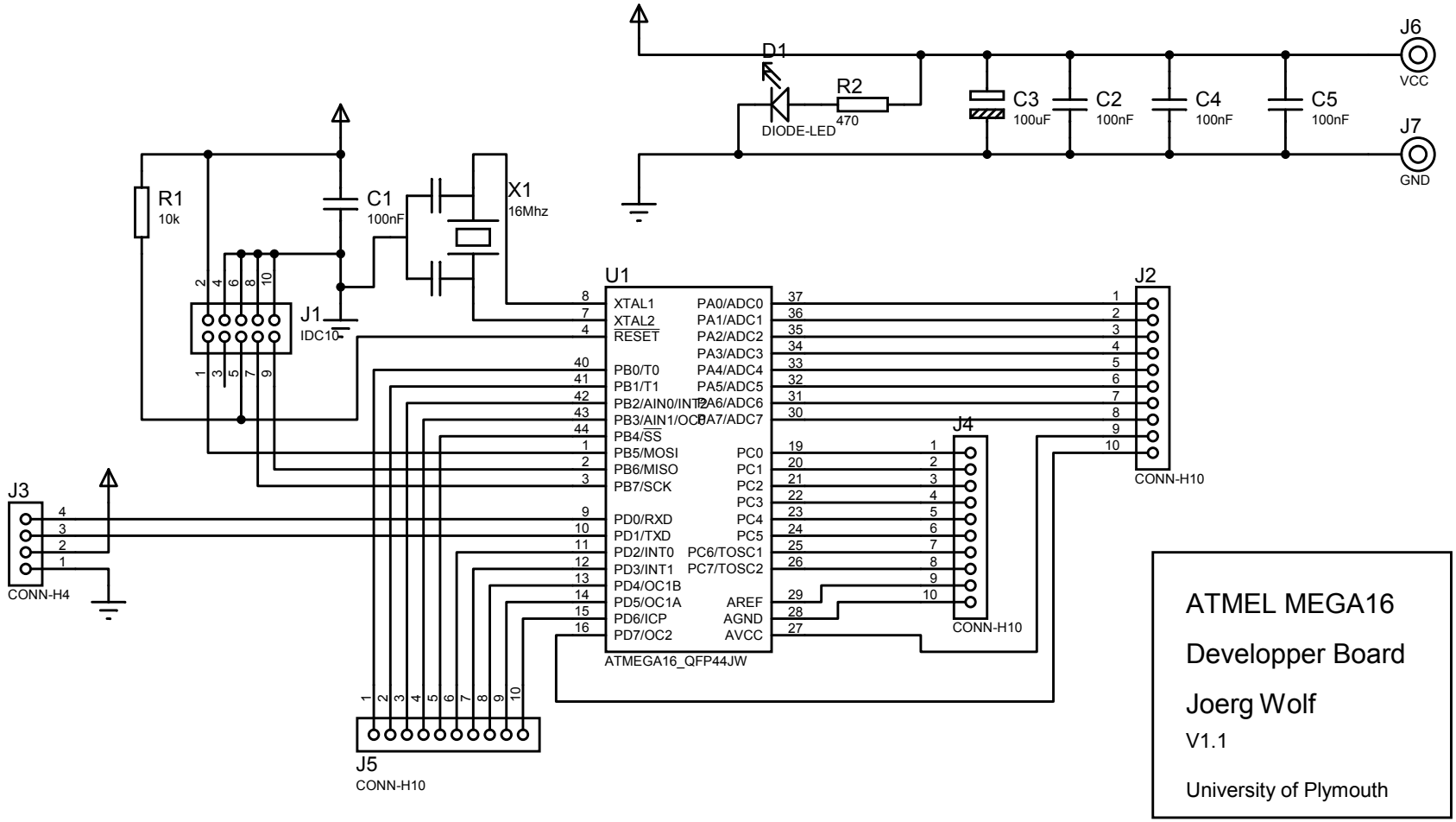
J6
VCC
J7
GND
D1
DIODE-LED
R2
470
C3
100uF
C2
100nF
C4
100nF
C5
100nF
R1
10k
C1
100nF
X1
16Mhz
J1
IDC10
U1
XTAL1
XTAL2
RESET
PB0/T0
PB1/T1
PB2/AIN0/INT2
PB3/AIN1/OC0
PB4/SS
PB5/MOSI
PB6/MISO
PB7/SCK
PD0/RXD
PD1/TXD
PD2/INT0
PD3/INT1
PD4/OC1B
PD5/OC1A
PD6/ICP
PD7/OC2
PA0/ADC0
PA1/ADC1
PA2/ADC2
PA3/ADC3
PA4/ADC4
PA5/ADC5
PA6/ADC6
PA7/ADC7
PC0
PC1
PC2
PC3
PC4
PC5
PC6/TOSC1
PC7/TOSC2
AREF
AGND
AVCC
ATMEGA16_QFP44JW
J2
CONN-H10
J4
CONN-H10
J3
CONN-H4
J5
CONN-H10
ATMEL MEGA16
Developper Board
Joerg Wolf
V1.1
University of Plymouth